Development of Ultrafast Terahertz Time-domain Spectroscopy in Ultrahigh Magnetic Fields

J.A. Curtis (University of Alabama at Birmingham, Physics); T.D. Tokumoto (University of Alabama at Birmingham, Physics); J.G. Cherian (FSU, Physics); J.L. Reno (Sandia National Lab); S.A. McGill (NHMFL); D.J. Hilton (University of Alabama at Birmingham, Physics)

Introduction

We have taken preliminary steps toward the construction of a Terahertz time domain spectrometer (TTDS) to measure the magnetic field dependent Hall conductivity line width of a high mobility two dimensional electron gas (2DEG) up to 30T. These data will be combined with temperature dependent (0.4 K-100 K) data previously acquired using a TTDS system aligned in transmission with the Oxford 10 T SpectroMag in cell 1. We have built a prototype of a reflection spectrometer in SCM3 and identified several unforeseen technical challenges. We are currently using the information learned during this prior run to redesign the apparatus for a future experiment.

Experimental

The reflection TTDS is shown in **Figure 1** and is a modified version of a standard terahertz time-domain transmission spectrometer. The laser source (a Coherent Legend 1 KHz amplifier) is split into a Terahertz arm and a gate arm. The gate arm is sent through a translation stage and directed toward one of two electro-optic (EO) detectors which are composed of a ZnTe crystal, quarter wave plate, polarizing cube beam splitter, and two photo diodes. The Terahertz arm is directed toward a ZnTe crystal that generates Terahertz (0.1-2 Terahertz) using optical rectification. The Terahertz is then directed toward a wedged silicon window that is used as a Terahertz beam splitter. This splitter is used to self-reference the Terahertz pulse in order to avoid an ambiguous phase shift in the reflected electric field (magnetic field or temperature dependent shifts vs. sample translation). The splitter directs the Terahertz toward a reference (EO) detector and toward a set of off axis parabolic mirrors (OAP), which focus the Terahertz onto the sample. Once reflected, the Terahertz returns to the Terahertz beam splitter and is directed toward the second EO detector. We attempted to construct this system at the DC field facility of the NHMFL using SCM3 in cell 3.

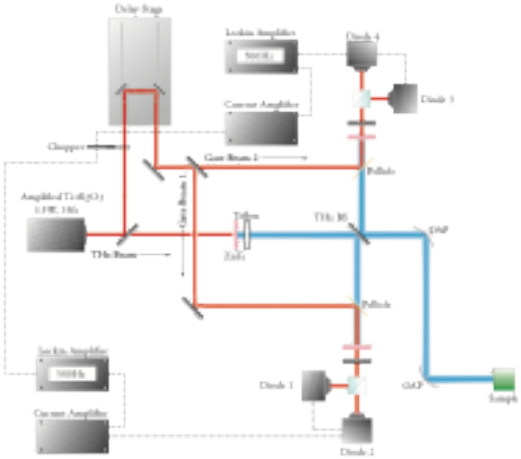

Figure 1: A diagram of our Terahertz Time Domain Reflection Spectrometer prototype experiment.

Based on our earlier work in Cell 1, we have developed a new method of analysis for terahertz time domain spectroscopy experiments[1]. This Characteristic Matrix method, developed using prior data acquired at NHMFL, will enable our future experiments in these high magnetic field systems, where the geometry of the Split Helix or SCM3 magnets will restrict our ability to perform transmission experiments

Conclusions

With the acquired knowledge by SCM3 experiment, we now are ready to take the next steps to the application of this system to the study of a high mobility 2DEG in the quantum Hall limit. To this end, we are working on a system at UAB that will be transported to NHMFL during magnet time. Furthermore, we are considering construction of a custom probe for use in the Split Florida Helix.

Acknowledgements

J.A. Curtis is supported by Department of Education GAANN Fellowship (P200A090143). D.J. Hilton and T.D. Tokumoto are supported by a National Science Foundation CAREER Grant (DMR-1056827). This project was partially supported by NHMFL-UCGP and a National Science Foundation MRI (DMR-122927, PI: McGill).

References

[1] Hilton, D. J., Optics Express, **20**, 29717-29726 (2012).