Comprehensive Analysis of Binary Current Leads for the NHMFL Series Connected Hybrid Magnet in the Course of Their Development

Andrew V. Gavrilin, W. Scott Marshall, Patrick D. Noyes, Sarah Napier, and Mark D. Bird (NHMFL)

Introduction

The NHMFL MS&T Division is finalizing the design of binary 20-kA class current leads (CLs) to be used in the Serious Connected Hybrid Magnet (SCH) (**Figure 1**). The lead is to consist of a resistive nitrogen-vapor-cooled section of original design (jellyroll type) and a conduction-cooled HTS section connected together by a liquid nitrogen intercept. The HTS part is to be made up of REBCO tape stacks fitted to a stainless steel pipe going to work as a support structure and a protecting shunt resistance in the event of quench.

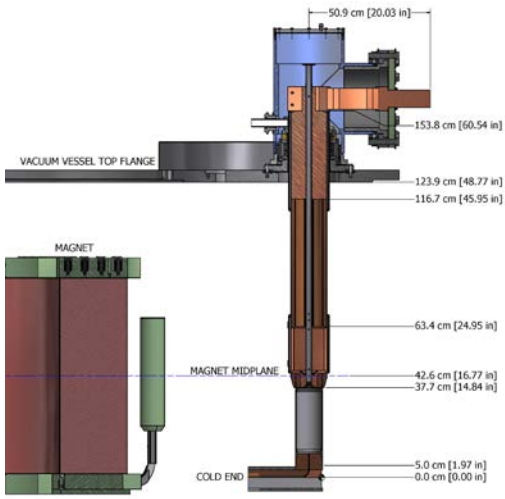

Figure 1. Cross section of the SCH binary current lead located not so far from the magnet.

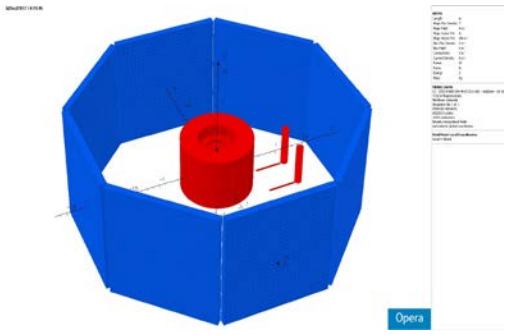

Figure 2. FE model of SCH magnet system with components to be included in the analysis of magnetic field in the CLs' HTS section area: SCH coils, iron shield plates, multi-stack HTS sections of the CL pair, and bus-bars. OPERA by Vector Fields is employed.

Analyses to be done in the course of the current leads development

As opposed to multi-kA binary CLs developed by others, the NHMFL CLs, being installed not so far from the magnet, are supposed to operate in a rather high fringe magnetic field that is a challenging option never tried before. Particularly, this fact invited a comprehensive FEA of the superposition of magnetic field from the SCH magnet coils and the CLs' self-field in the presence of a massive magnetic iron shield with a view to calculating precisely the critical current reduction of the REBCO tapes so as to find the appropriate number of them (based upon in-house measurements of the critical current depending on the magnetic field and the field vector angular orientation). In addition, the attractive forces (first and foremost acting upon the HTS section) turn out to be rather high and should be reliably computed to be supported. OPERA by Vector Fields was used to fulfill the tasks (**Figure 2**). A FEA by ANSYS was employed to simulate the current transition from the resistive section to the HTS one through the nitrogen intercept.

Also, detailed thermal analyses, both steady-state and transient ones, of the entire CLs, including the resistive and HTS parts, at the rated and idle currents were performed to optimize the CLs thermally and minimize the heat input to the nitrogen intercept and at the cold end of HTS section as well. The transient analysis, which typically is sophisticated and not customary, was done because the NHMFL SCH major operation scenario is a so-called cyclic operation, when the magnet is ramped up to the field and then ramped down to zero on a periodical basis. The thermal analysis is followed by a thermal stress analysis to complete the picture.

Such a complex, comprehensive analysis is unprecedented and assumed to enable us to succeed with the CLs development.

Acknowledgement

The work is supported by the National Science Foundation under Grant DMR-060342.

Reference

[1] Marshall, W.S., *et al.*, presented at Applied Supercond. Conf. of 2012, Portland, OR, October 2012.