Development of Thin Metal Oxides Coatings for Electrical Insulation in High Temperature Superconductor (HTS) Magnets

H. Kandel, J. Lu, Y. Viouchkov, J. Jiang, S. Gundlach, A. Voran, P. Chen, C. Natanette, R.P. Walsh, W. Shepherd, W.D. Markiewicz, H.W. Weijers, E. Hellstrom, U.P. Trociewitz, and D.C. Larbalestier (NHMFL-FSU)

Introduction

Good electrical insulation is vital for high temperature superconductor (HTS) magnets. However, there are several challenges that make the development complex. First, the insulation must have excellent dielectric, mechanical, and thermal properties and it must operate at cryogenic temperatures and high mechanical stresses (Lorenz forces). Second, the insulation has to be very thin to maximize the engineering current density in the coil. Third, the insulation technique has to be compatible with all other aspects of magnet construction. Fourth, it should be capable of high throughput and be low in cost.

We have developed thin metal oxide coatings for electrical insulation in two quite different magnet technologies based upon $YBa_2Cu_3O_{7-x}$ (YBCO) coated conductor tapes and $Bi_2Sr_2CaCu_2O_{8-x}$ (Bi-2212) multifilament round wires. A sol-gel derived Al_2O_3-SiO_2 coating on stainless steel (SS) tape has been developed. The stainless steel provides the co-wound, interleaving insulation for the REBCO tape of the 32 T superconducting magnet[1]. For Bi-2212 which must be reacted in place at temperatures up to almost 900 C, a TiO_2 coating has been developed [2].

Experimental

A 500 m long SS tape was coated with Al_2O_3 dispersed SiO_2-sol gel using a Reel-to- Reel dip coating system (**Figure 1**). A 15 m. long Bi-2212 conductor was dip coated with a TiO_2, SiO_2 sol and a polymer binder solution.

Results and Discussion

The Al_2O_3 - SiO_2 coating is about 2 µm in thickness with a breakdown voltage of about 200 V corresponding to a dielectric strength of about 50 MV/m at room temperature. A mechanical fatigue test of 1000 cycles to 0.65% tensile strain at 4.2 K shows very good mechanical integrity with no flaking, cracking or spalling. The TiO_2 coating is about 15 µm in thickness with a breakdown voltage of about 300 V after full Bi-2212 heat treatment. No significant I_c degradation was observed in fully heat treated spiral samples.

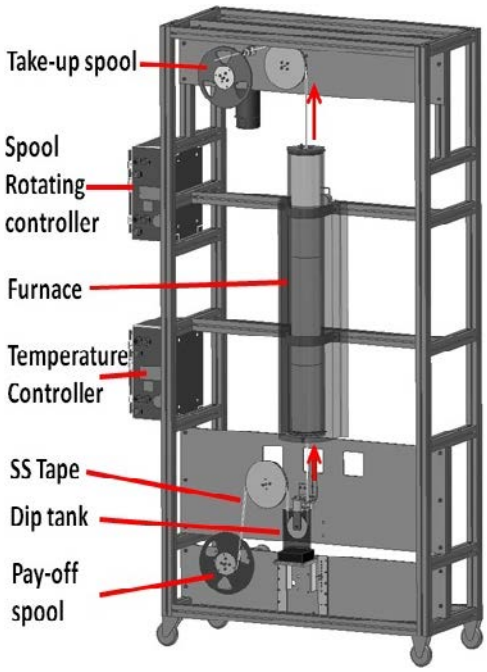

Figure 1. A schematic diagram of Al_2O_3-SiO_2 dip-coating system.

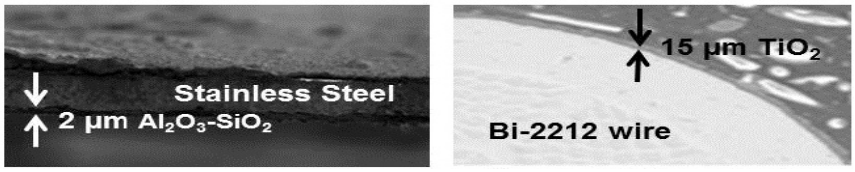

Figure 2. SEM cross-sectional images of Al_2O_3-SiO_2 coating on SS tape and TiO_2 coating on Bi-2212 wire.

Conclusions

We have developed thin metal oxide coatings for electrical insulation for two quite different magnet technologies based upon $YBa_2Cu_3O_{7-x}$ (YBCO) coated conductor tapes and $Bi_2Sr_2CaCu_2O_{8-x}$ (Bi-2212) multifilament round wires.

Acknowledgements

This work was supported by the NSF (Grant No.DMR-0654118) and the State of Florida.

References

[1] Kandel, H. *et al.*, IEEE Trans. Appl. Supercond., 22 (5), 7701605 (2012).
[2] Kandel, H. *et al.*, presentation 4MA-07, ASC conference, Portland, OR, Oct. 2012.