Design and Construction of the Conical Bore Resistive Insert for the SCH

J. Toth (NHMFL); M.D. Bird (NHMFL); S. Bole (NHMFL); J. O'Reilly (NHMFL)

Introduction

The NHMFL is developing two Series-Connected Hybrid (SCH) magnets, each comprising a superconducting outsert built with Nb_3Sn cable-in-conduit conductor and a resistive insert using Florida-Bitter technology. The first SCH, to be installed and operated at the Helmholtz Center Berlin (HZB), will include will be used for neutron-scattering experiments and will a *conical warm bore with 30 degree opening angle at 25T central field, a unique combination worldwide*.

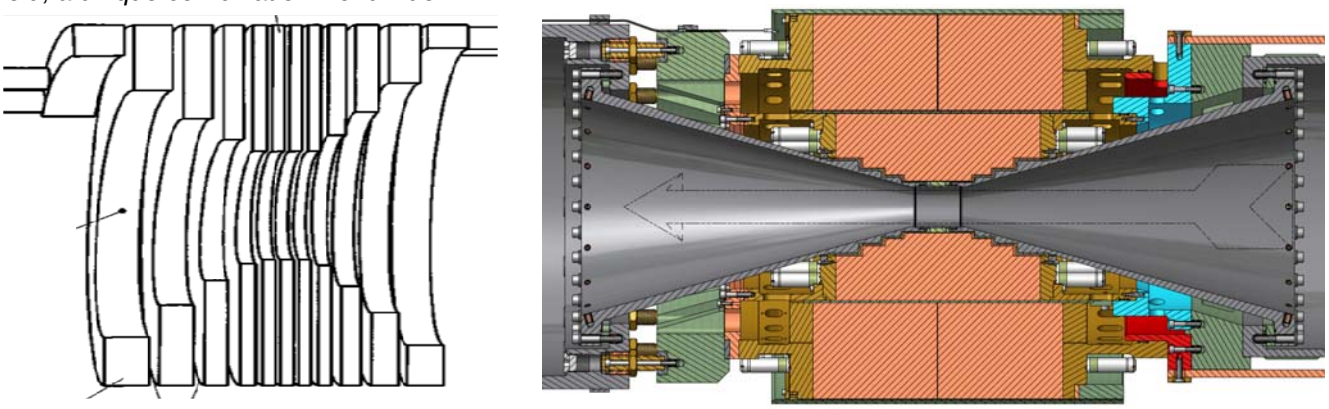

Fig. 1. Left: General concept of conical Florida Bitter Magnet technology including a stepped inner radius to create conical bore and a variation in turn thickness to balance current densities and manage structural stress. Right: Cross section view of CAD Model of the Conical Bore Resistive Insert for the HZB-SCH including two coils.

Results and Discussion

The resistive insert [1] includes two coils electrically in series with a total power consumption of 4.4 MW. While the outer coil is a regular state-of-the-art high field solenoid, the inner one employs the novel technology called Conical Florida Bitter Magnet including a stepped inner radius. This conical configuration causes unique design challenges for the complex hydraulics of the cooling water as well as the stress management in the winding:

- Variation in inner diameter coupled with variation in turn thickness and current-density concentrations at steps results in very complicated stacking pattern.
- In order to meet required water gap in each step, stacking pattern must be adjustable (in each region) to accommodate sheet-metal thickness tolerances.
- Disk cooling hole pattern is optimized based on thermal-electric and stress calculations. Those coupled Finite-Element Analyses were performed for all sections plus all transition steps of each coil.
- While *B* coil is at modest field (19 T) its bore is large (246 mm) resulting in large stress accommodated by using CuZr sheet metal for the winding.
- Cooling water supply for 4.4 MW ~ 40 l/s is substantially lower than typical NHMFL high field magnets with same 500 mm outer diameter. This required more stringent water management resulting in pushing fabrication limits for minimum cooling channel widths as well as clearance gaps for assembly.

Conclusions

In 2010 the NHMFL was awarded a patent (US 7,825,760) for the development of the concept of a conical magnet [2] and since then has continued to pioneer resistive magnet technology. The completion of the design and construction of the eventual first user magnet incorporating this new technology represents a remarkable additional milestone in NHMFL world leadership in this field. The complete HZB SCH Magnet system is planned to be operational in 2014.

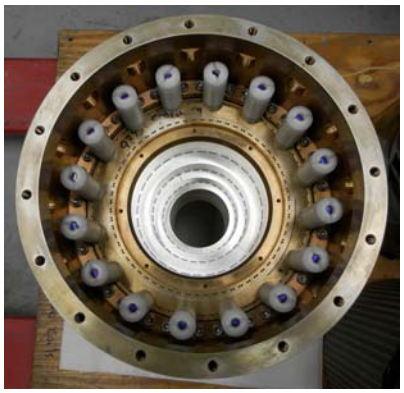

Fig. 2. Completed assembly of first SCH-HZB A-coil (NHMFL Coil #0229-Rev4) with conical bore.

Acknowledgements

This work was supported by the German government.

References

[1] Toth, J., *et al*., "Design of the Conical Resistive Insert for a 25 T Neutron-Scattering Magnet", presented at 2013 IEEE 23rd Magnet Technology Conference (MT-23).

[2] Bird, M.D, *et al*.,"Conical Magnet", United States Patent, #7,825,760 B2, Nov 2, 2010.