^{13}C-optimized 1.5-mm NMR Probe Based on High Temperature Superconductors

V. Ramaswamy, A.S. Edison (UF, NHMFL); J. Hooker, W.W. Brey (FSU, NHMFL); R.S. Withers (Agilent Technologies, Maxim Integrated); R.E. Nast (Agilent Technologies, Out of the Fog Research)

Introduction

^{13}C NMR holds several advantages over ^{1}H NMR studies of small biomolecules, such as a large chemical shift dispersion range and the ability to directly detect backbones. However, ^{13}C sensitivity is especially low due to its low gyromagnetic ratio and low natural abundance. To mitigate this lack of intrinsic sensitivity, we have recently developed a ^{13}C-sensitive 1.5-mm probe optimized for small molecule NMR at 14.1 T [1]. The probe employs High Temperature Superconducting (HTS) coils in order to maximize detection sensitivity. HTS probe technology and its applications to small molecule NMR are available in a recent review [2].

Experimental

As shown in the figure below, this probe uses orthogonal nesting of 4 pairs of planar HTS coils. The probe is optimized for ^{13}C detection by placing the ^{13}C coils closest to the sample. Placement of HTS coils in close proximity to the sample presents technical challenges. Stray electric fields from the coil fringing into the sample introduce a source of noise in the NMR experiment. The ^{13}C coils in this probe employ an innovative counterwound spiral design, which confines the electric field close to the substrate. The mass sensitivity of ^{13}C detection on this probe is 2x that available on any other probe.

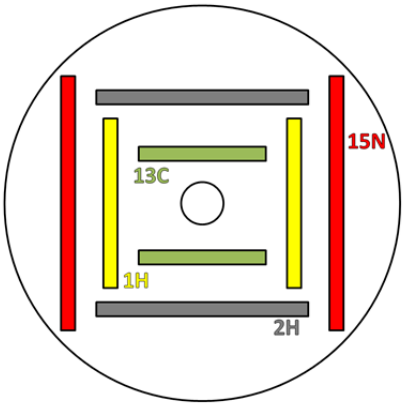

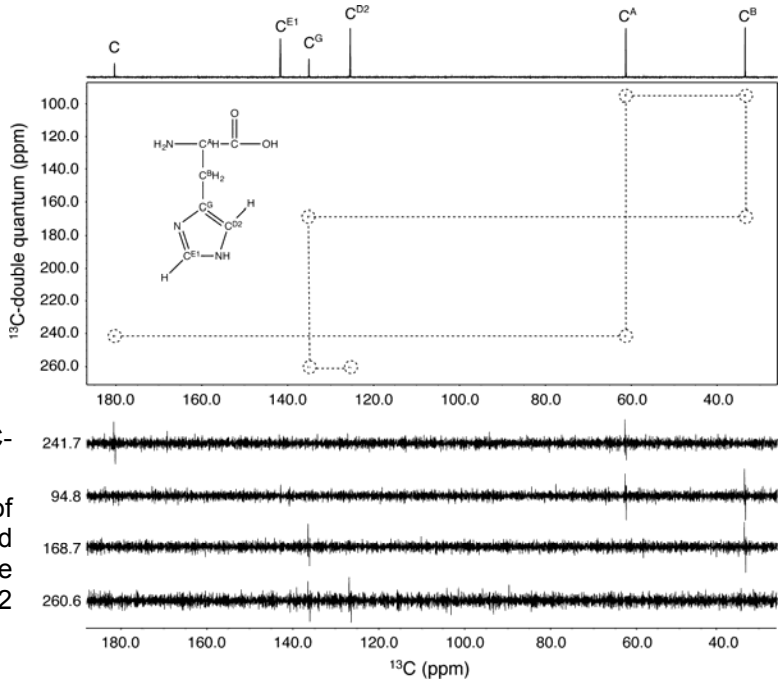

(Above) Cross-section layout of the ^{13}C-optimized probe.

(Right) ^{13}C-^{13}C INADEQUATE spectrum of 1.1 mg histidine. The spectrum was collected in 48 hours using the ^{13}C-optimized probe. The same experiment would require nearly 2 weeks on any other probe.

Results

A 35-µL sample volume renders this probe ideal for directly detected ^{13}C-based natural products chemistry and metabolomics applications. An INADEQUATE spectrum showing direct ^{13}C-^{13}C coupling is highlighted above to demonstrate the ^{13}C sensitivity of this probe. The probe is now available for use through the AMRIS user program.

Acknowledgements

The authors gratefully acknowledge support from NIH/NIBIB through grant 1R01EB009772-01 as well as technical and financial support from Agilent Technologies.

References

[1] V. Ramaswamy, J.W. Hooker, R.S. Withers, R.E. Nast, W.W. Brey, A.S. Edison, Journal of Magnetic Resonance, 2013, 235, pp 58–65. [2] V. Ramaswamy, J.W. Hooker, R.S. Withers, R.E. Nast, A.S. Edison, W.W. Brey, eMagRes, 2013, 2, pp 215–228.