MRI Reveals Brain Abnormalities in Drug-Naive Parkinson's Disease

Planetta, P.J. (UF, Applied Physiology and Kinesiology); McFarland, N.R.; Okun, M.S. (UF, Neurology); Vaillancourt, D.E. (UF, Applied Physiology and Kinesiology)

Introduction

Most brain imaging studies of PD have focused on patients who are already taking antiparkinsonian medication, thus making it difficult to isolate the effects of disease from those of treatment. In this review we present evidence from diffusion tensor imaging (DTI) and blood oxygenation level-dependent (BOLD) functional magnetic resonance imaging (fMRI) supporting the hypothesis that drug-naive PD patients have microstructural alterations in the substantia nigra (SN) and thalamus, and functional abnormalities throughout the basal ganglia circuitry. In addition, we discuss these MRI-based abnormalities in the context of motor symptom severity and the non-tremor-dominant (NTD) and tremor-dominant (TD) subtypes of PD.

Results and Discussion

Fig. 1 summarizes the DTI and fMRI work on drug-naive PD patients in a simplified schematic diagram of the basal ganglia circuitry. DTI research using a region-of-interest approach has shown that the microstructural integrity of specific subregions of the SN and thalamus are disrupted in drug-naive PD [1,2]. A histogram analysis of whole-brain fractional anisotropy (FA) maps suggests that there is a global reduction in gray matter in drug-naive PD, which is more marked in NTD patients [3]. However, voxel-based analyses of DTI data are needed to provide a more comprehensive picture of the microstructural changes in these patients.

fMRI has revealed reduced BOLD activation in the basal ganglia, thalamus, several cortical areas [4], and cerebellum [5] in drug-naive PD patients during motor tasks, and that the BOLD signal is related to bradykinesia in most basal ganglia nuclei and tremor in the internal globus pallidus. Moreover, fMRI has shown that TD and NTD patients have differential activation in the globus pallidus and dorsolateral prefrontal cortex [6], suggesting fMRI may be useful in studying how targeted therapies affect PD subtypes.

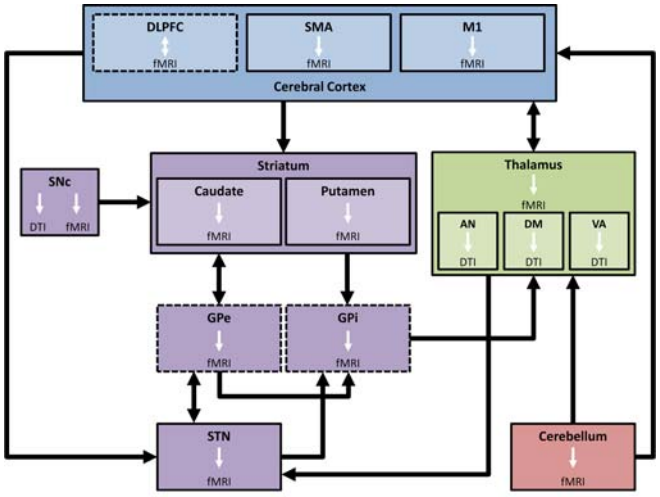

Fig.1 Schematic diagram of the basal ganglia circuitry showing areas revealed by MRI to be structurally and functionally abnormal in drug-naive PD. fMRI refers to BOLD activation during motor tasks. DTI refers to FA values. Black arrows indicate anatomical connections. White arrows indicate whether PD patients had lower or higher fMRI activation/FA values than controls. Dashed lines denote areas that may be differentially affected in the TD and NTD subtypes . ACC, anterior cingulate cortex; AN, anterior nucleus; DLPFC, dorsolateral prefrontal cortex; DM, dorsomedial nucleus; GPe, external globus pallidus; GPi, internal globus pallidus; M1, primary motor cortex; SMA, supplementary motor area; SNc, substantia nigra pars compacta; STN, subthalamic nucleus; VA, ventral anterior nucleus.

Conclusions

MRI-based work shows that the microstructural integrity of the SN and thalamus and functional activation throughout the basal ganglia circuitry are abnormal in drug-naive PD. A multimodal approach that includes DTI and fMRI may help elucidate the relationship between structural and functional brain abnormalities in drug-naive PD, including its subtypes.

Acknowledgements

National Institutes of Health (R01-NS-052318, R01-NS-058487, R01-NS-075012).

References

[1] Planetta, P.J., *et al.*, AJNR, **34**, 74-79 (2013).
[2] Vaillancourt, D.E., *et al.*, Neurology, **72**, 1378-1384 (2009).
[3] Tessa, C., *et al.*, AJNR, **29**, 674-680 (2008).
[4] Prodoehl, J., *et al.*, Mov Disord, **25**, 2035-2043 (2010).
[5] Tessa, C., *et al.*, Exp Neurol, **224**, 299-306 (2010).
[6] Prodoehl, J., *et al.*, JAMA Neurol, **70**,100-106 (2013).