Optimized Circuit for Excitation and Detection with One Pair of Electrodes for Improved Fourier Transform Ion Cyclotron Resonance Mass Spectrometry

Chen, T. (NHMFL, FSU, Chemistry); Beu, S.C. (SC Beu Consulting); Kaiser, N.K.; Hendrickson, C.L. (NHMFL, Chemistry)

Results and Discussion

A conventional Fourier transform-Ion Cyclotron Resonance (ICR) detection cell is azimuthally divided into four equal sections. One pair of opposed electrodes is used for ion cyclotron excitation, and the other pair for ion image charge detection. In this work, we demonstrate that an appropriate electrical circuit facilitates excitation and detection on one pair of opposed electrodes. The new scheme can be used to minimize the number of electrically independent ICR cell electrodes and/or improve the electrode geometry for simultaneously increased ICR signal magnitude and optimal postexcitation radius, which results in higher signal-to-noise ratio and decreased space-charge effects.

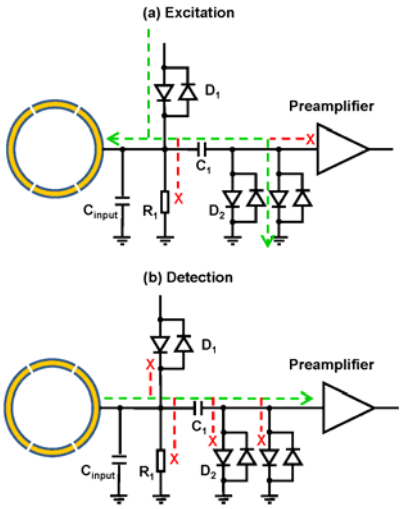

Figure 1. Circuit used to achieve excitation and detection with one pair of electrodes. For clarity the circuit shown is for a single electrode, but an identical circuit is connected to the opposed electrode to allow dipolar excitation and differential detection of the image current. Figure 1(a) displays the ac current path during excitation. The pair of diodes (D1) conducts during excitation so the full excitation voltage (less the small forward diode drop) is applied to the cell electrode. Two additional pairs of diodes (D2) at the input of the preamplifier conduct the excitation current to ground and protect the preamplifier from voltage overload by limiting the input potential to the forward drop of the conducting diode. A capacitor (C1, mica, 330 pF, Cornell Dubilier Electronics, Inc.) sustains the required voltage drop between the electrode and the preamplifier and limits current flow through the diodes during excitation. Figure 1(b) shows the ICR signal path during detection. ICR signals are in the microvolt range which is not high enough to turn on the diodes. Thus, D1 and D2 do not conduct and consequently prevent ICR signal leakage. The resistor R1 (10 M_, Metal Film resistor, Vishay Dale) holds dc bias of the cell electrode at 0 V but is of sufficient resistance to prevent significant loss of ICR signals to ground. Each pair of diodes (D1, D2) contains two anti-parallel diodes to function for ac current. C_{input} represents the equivalent net capacitance of cell, leads, etc., without the circuit. The circuit is built on a printed circuit board to minimize noise coupling. All electrical components are located exterior to the vacuum system.

Acknowledgements

This work was supported by NSF Division of Material Research through DMR-11-57490, NSF Division of Chemistry through CHE-10-19193 and CHE-10-16942, and the State of Florida.

References

[1] Chen, T. *et al.*, Rev. Sci. Instrum., **85**, 066107 (2014)